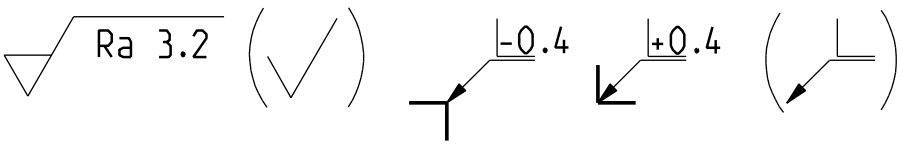
Ra 3.2
-0.4
+0.4

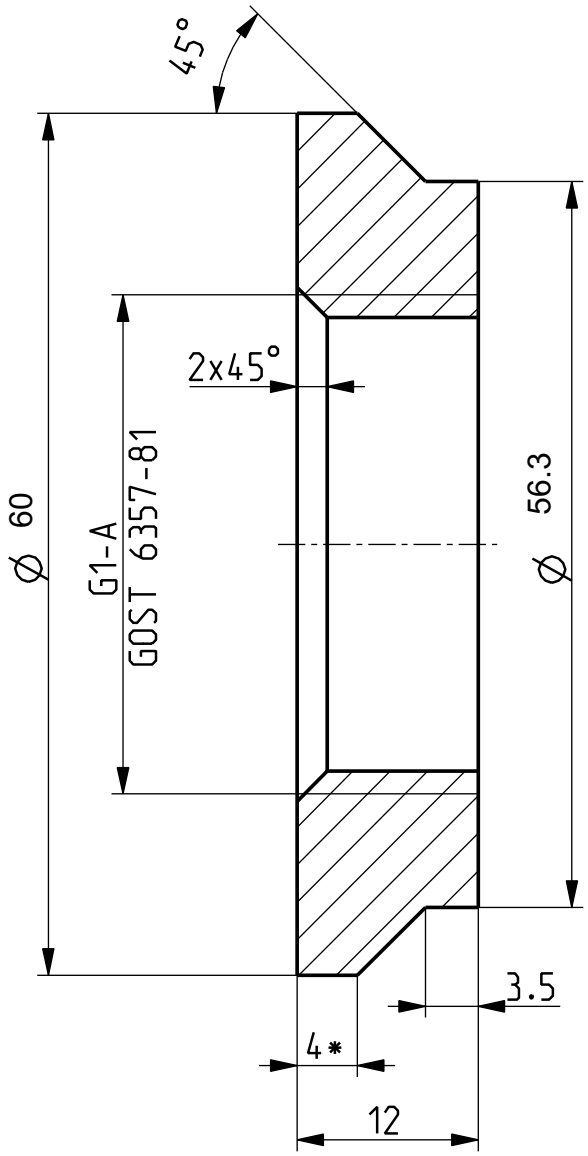
45°
2x45°
Ø 60
G1-A
GOST 6357-81
Ø 56.3
3.5
4*
12