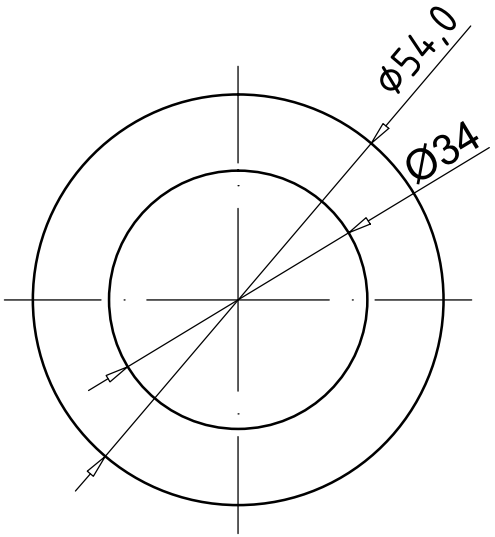
ø54,0
Ø34

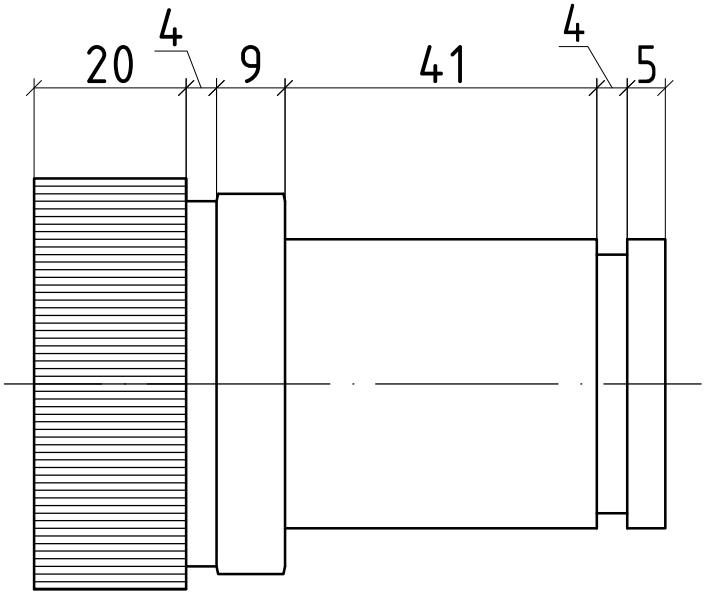
20
4
9
41
4
5

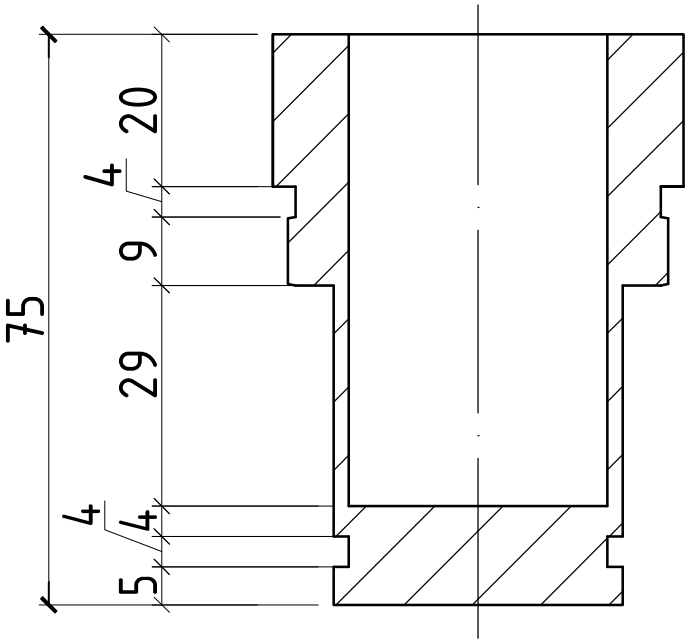
75
20
4
9
29
4
4
5