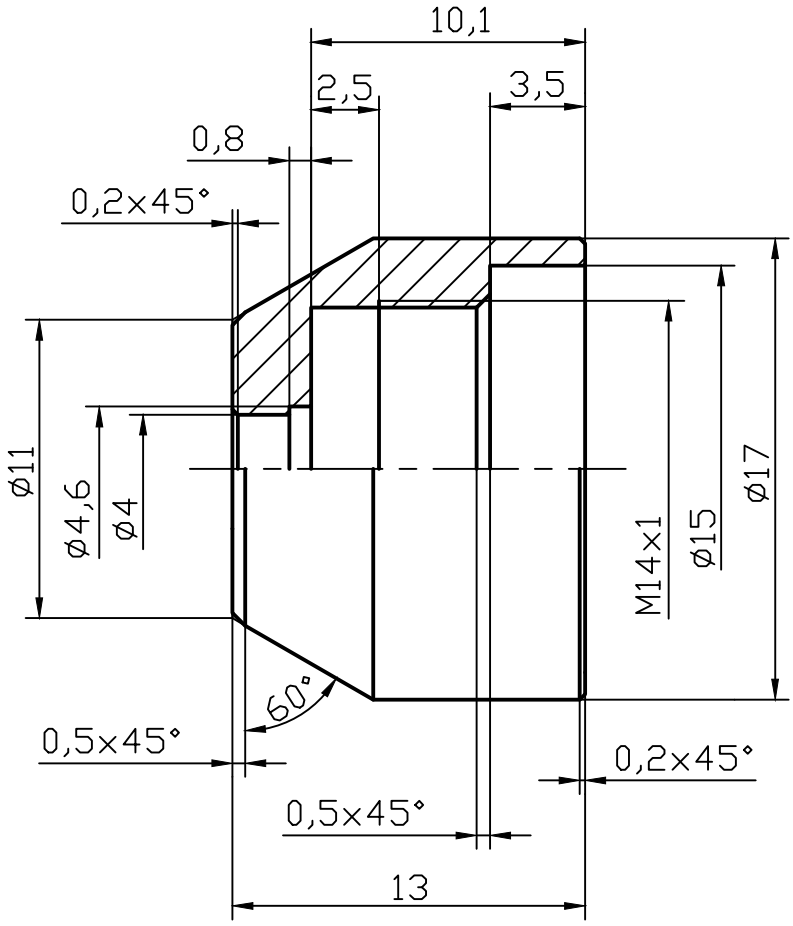

1. Tolerance: ±0,1
2. Plating: brushed nickel.

					6			
								4:1
					Brass			