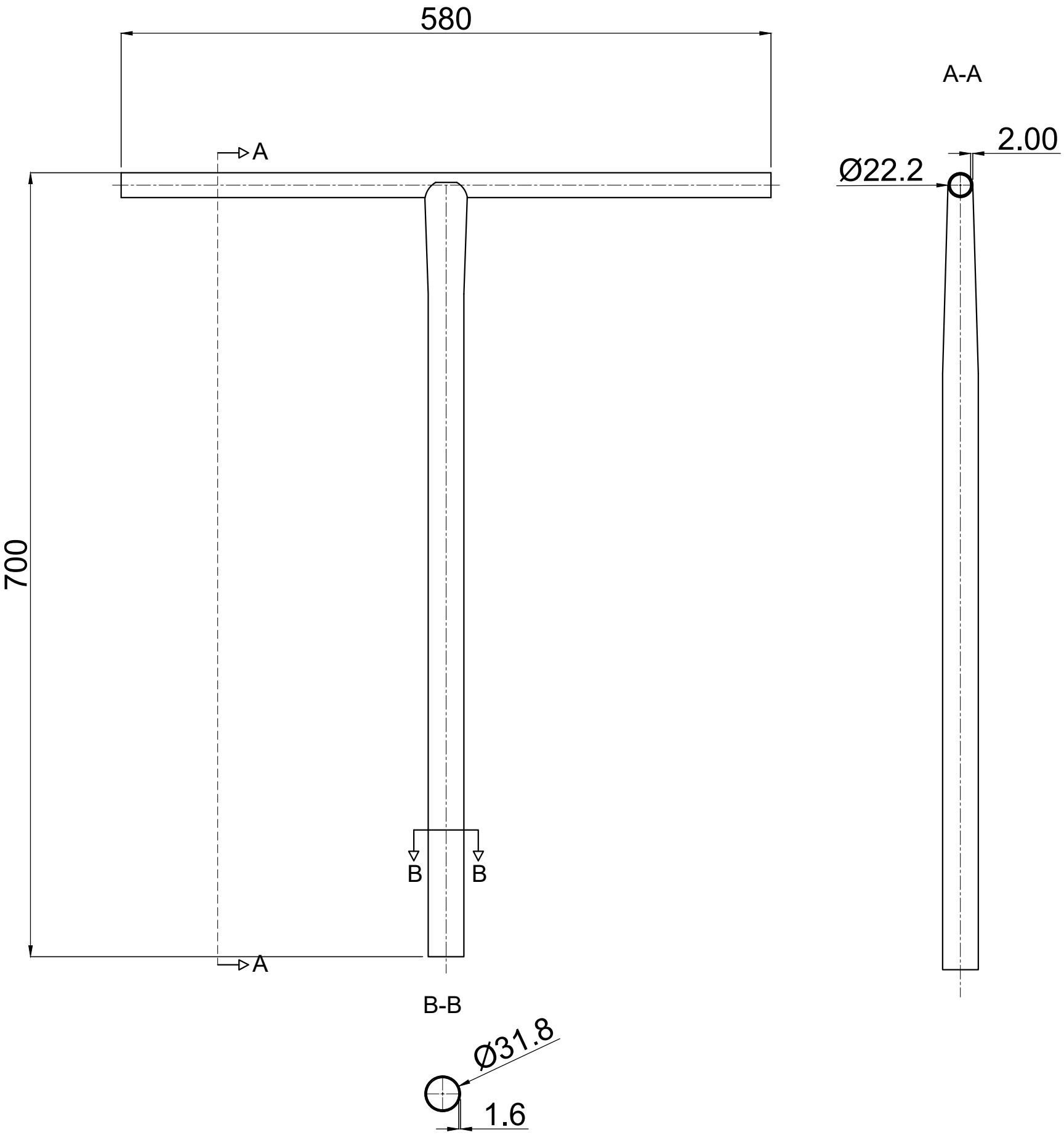
580
700
A
A
B
B
A-A
2.00
Ø22.2
B-B
Ø31.8
1.6