REV.	DESCRIPTION MODIFY	DATE	DESIGNER

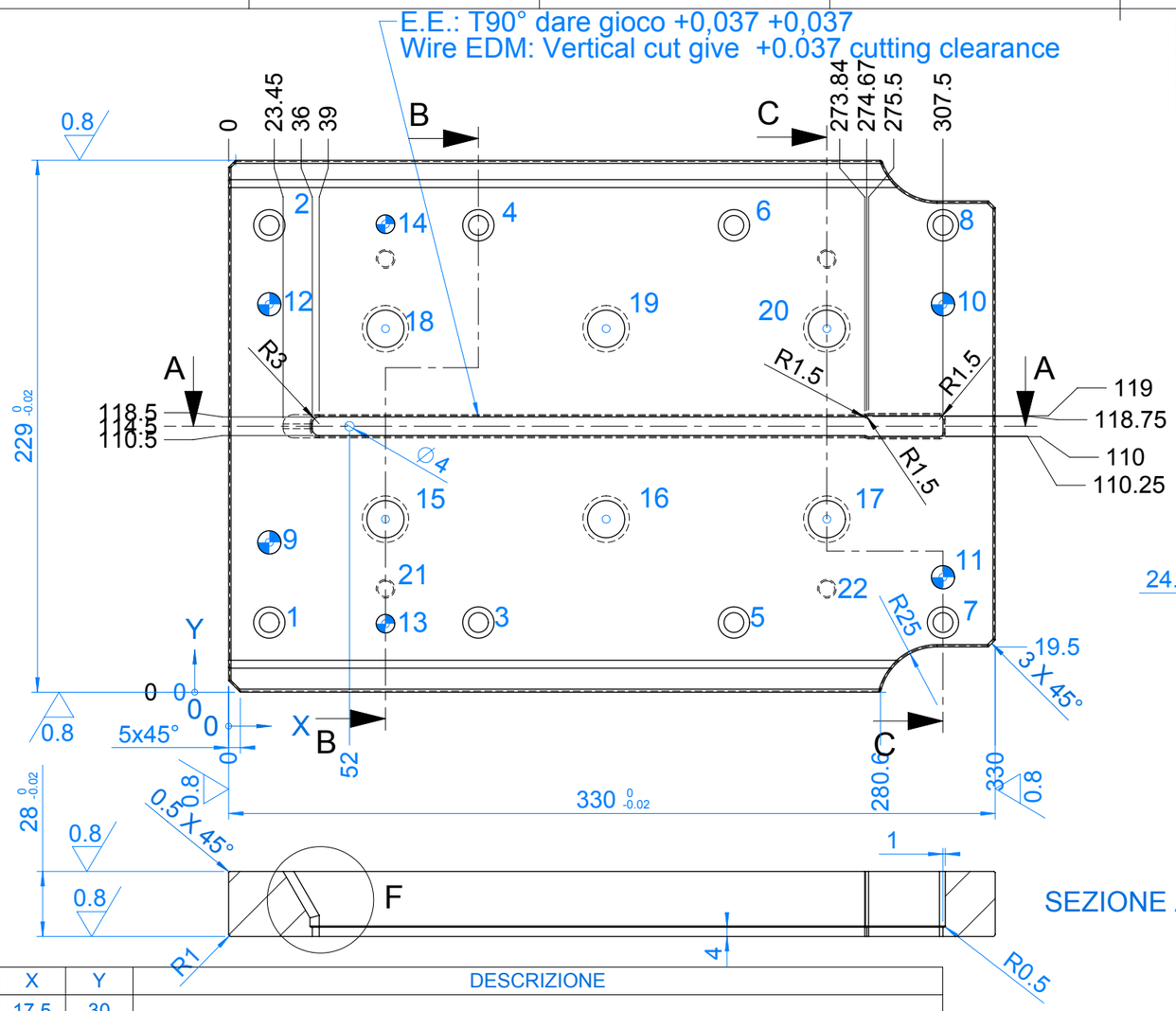

SEZIONE A-A

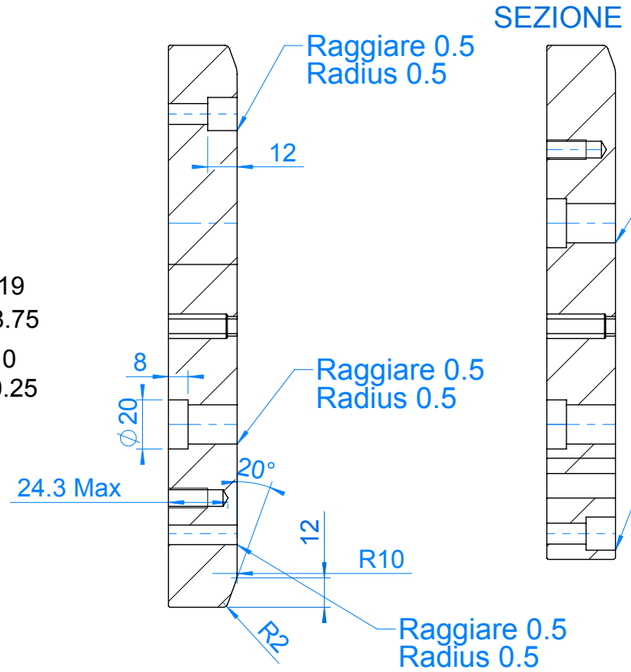

SEZIONE B-B

SEZIONE C-C

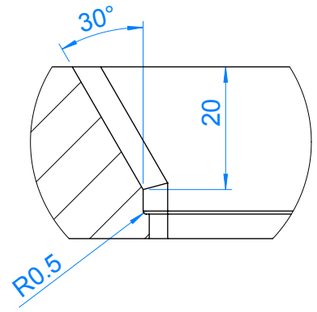

DETTAGLIO F
SCALA 1 : 1

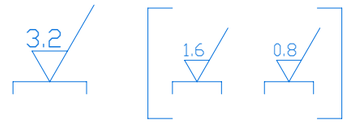

To stamp \ Marchiare
Code: 01140269481
M.Nr. 1.2379(K110)
T.T. TEMP-RINV-59-61HRC
T.S.

GLI ALESAGGI RELATIVI ALLE SPINE(DIN 7979)
VANNO ESEGUITI CON UNA TOLLERANZA +0.008 e +0.013 mm
The bore of the dowels needs a tolerance between +0.008 and +0.013 mm

LE QUOTE RELATIVE ALLA POSIZIONE DELLE SPINE
VANNO CONSIDERATE CON UNA TOLLERANZA DI +/-0.01mm.
The dimensions referred to dowels needs a tolerance +/-0.01mm

SMUSSARE TUTTI GLI SPIGOLI 1x45° TRANNE DOVE DIVERSAMENTE INDICATO
Chamfering all edgs 1x45° Except where otherwise indicated

	X	Y	DESCRIZIONE
1	17.5	30	∅8.5 Through ∅13.5 Counterbore Depth 12 Counterbore for screw M8 / Sede Vite T.C.E.I
2	17.5	201	
3	107.5	30	
4	107.5	201	
5	217.5	30	
6	217.5	201	
7	307.5	30	
8	307.5	201	
9	17.5	64.5	∅10 EDM wire eroded pin /Spina ElettroErosa
10	307.5	167	
11	307.5	49.5	
12	17.5	167	
13	67.5	29.5	∅8 EDM wire eroded pin /Spina ElettroErosa
14	67.5	201.5	
15	67.5	74.5	∅16 Through Precise Hole H7 / Foro Preciso H7 Passante
16	162.5	74.5	
17	257.5	74.5	
18	67.5	156.5	
19	162.5	156.5	
20	257.5	156.5	
21	67.5	44.5	Thread M8 Depth/Prof.16 / Filetto LATO LONTANO
22	257.5	44.5	

OS11-2016-A-P005

Machined	1.2379(K110)	330 X 229 X 28			
Raw	1.2379(K110)	35 x 235 x 335			
	Material Description	Dimensions		Weight Kg	Raw Code

Project: A160002	Machine: 09	Group: E1	Pos.: 005	Designer:	Quantity: 1
Painting:	Note:			Scale: 1:2.5 / Date: 20/07/2016	A3
Heating Treatment: TEMP-RINV-59-61HRC				Surface Treatment:	
Description: STAMPO SEPARAZIONE CUTTING MATRIX / MATRICE DI TRANCIO				Symmetric Code: / File Code: 01140269481	

qs group
METAL SHEET DIVISION
www.qs-group.com
Tel. +39 0732 67081

Tolleranze Generali UNI-2768-f classe: Fine

Tolleranze per dimensioni lineari								Tolleranze per dimensioni angolari				
>0-3	>3-6	>6-30	>30-120	>120-400	>400-1000	>1000-2000	>2000-4000	0-10	>10-50	>50-120	>120-400	400
±0.05	±0.05	±0.1	±0.15	±0.2	±0.3	±0.5	-	±1°	±0°30'	±0°20'	±0°10'	±0°5'

The reproduction and sale, in whatever form, of this design must be approved by the Alastampi srl