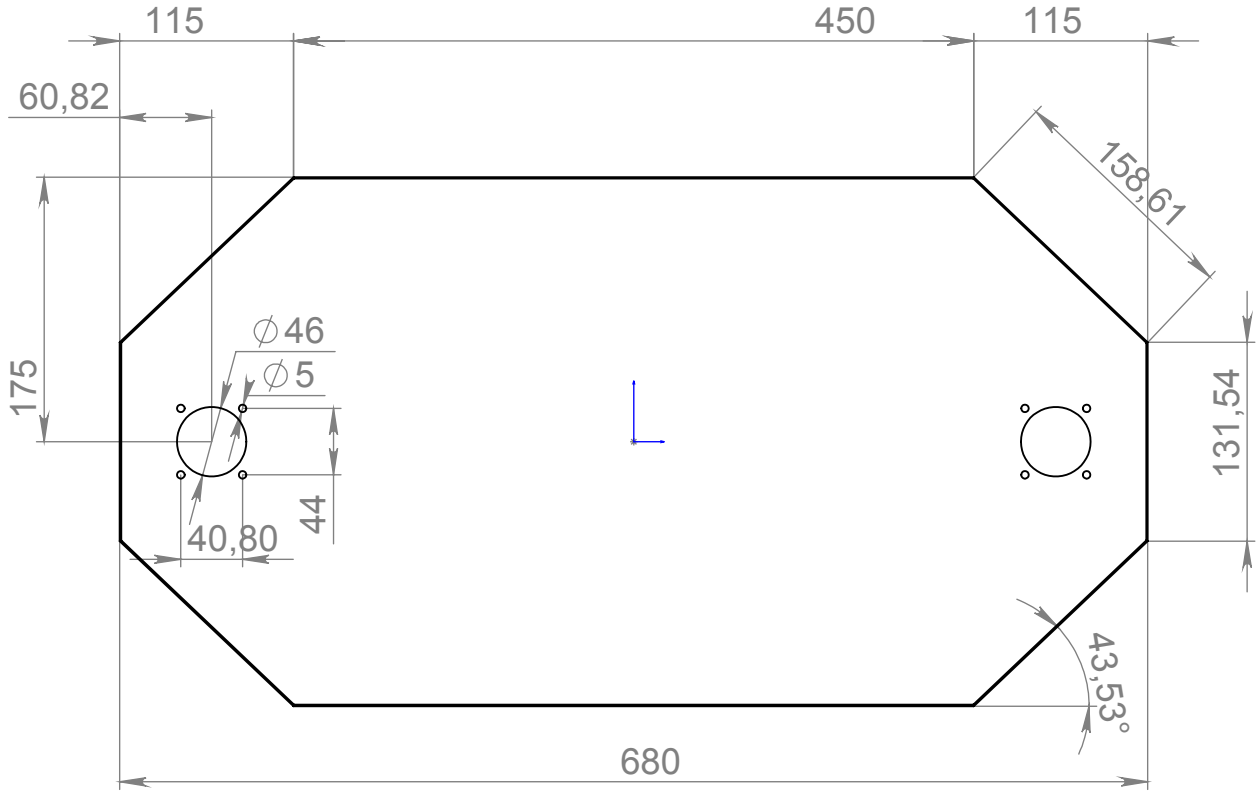
115
450
115
60,82
158,61
175
∅46
∅5
44
40,80
131,54
43,53°
680

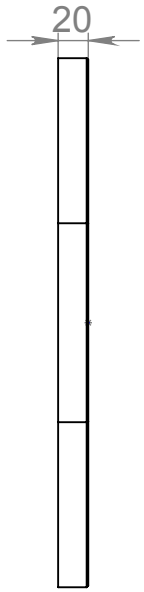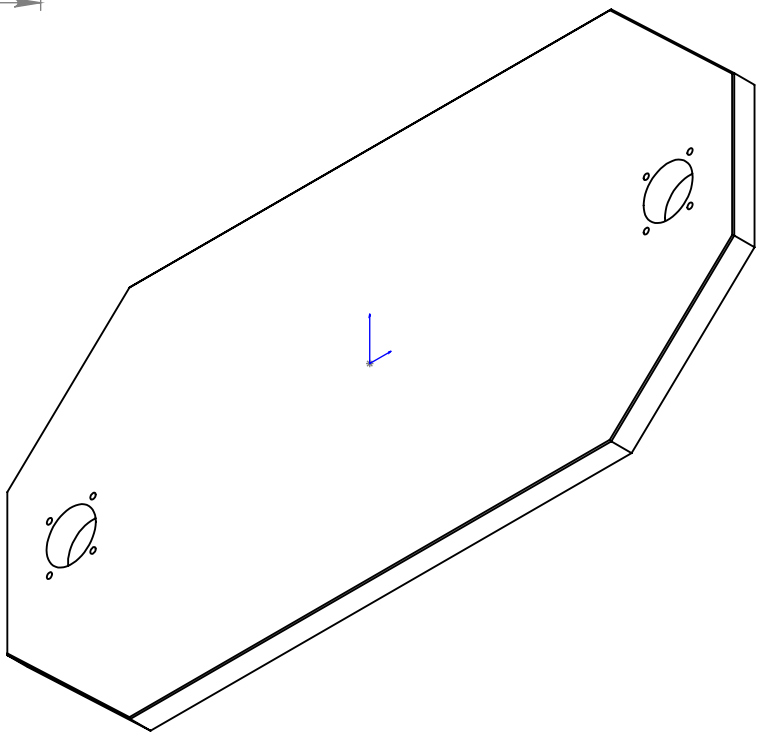
20