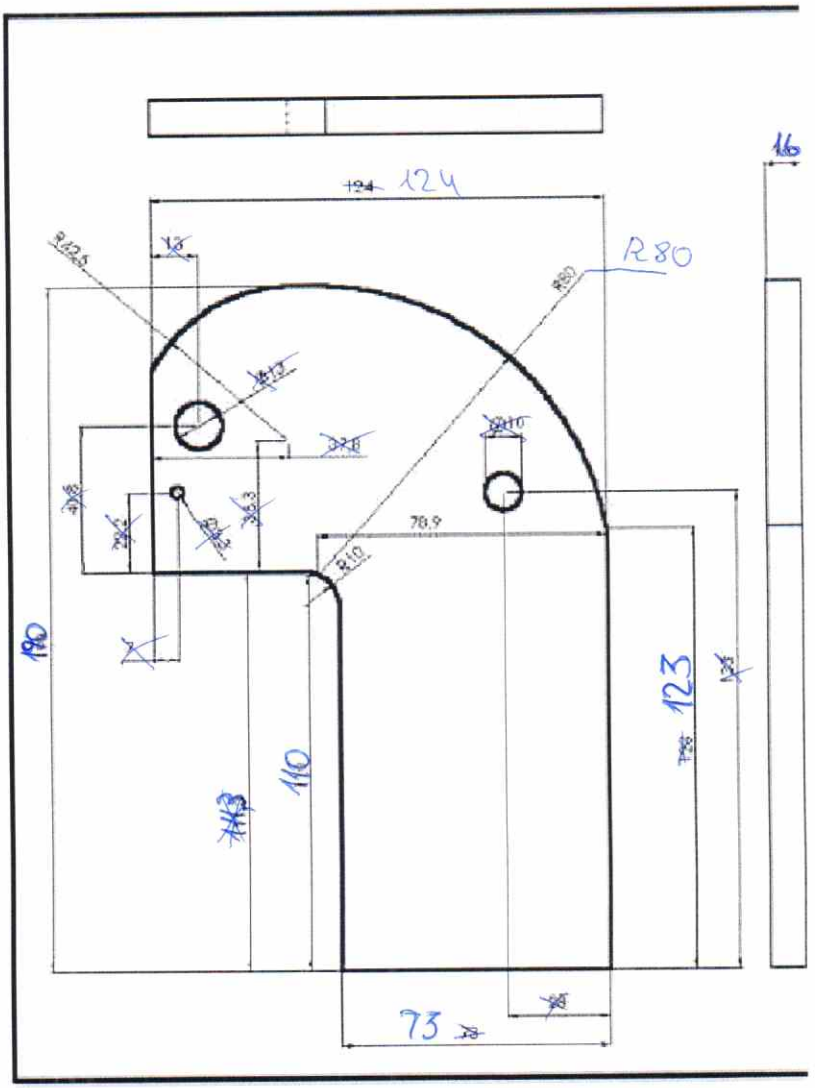
124
R80
R23,5
R80
78,9
R10
180
110
123
73
16

[illegible] – [illegible]