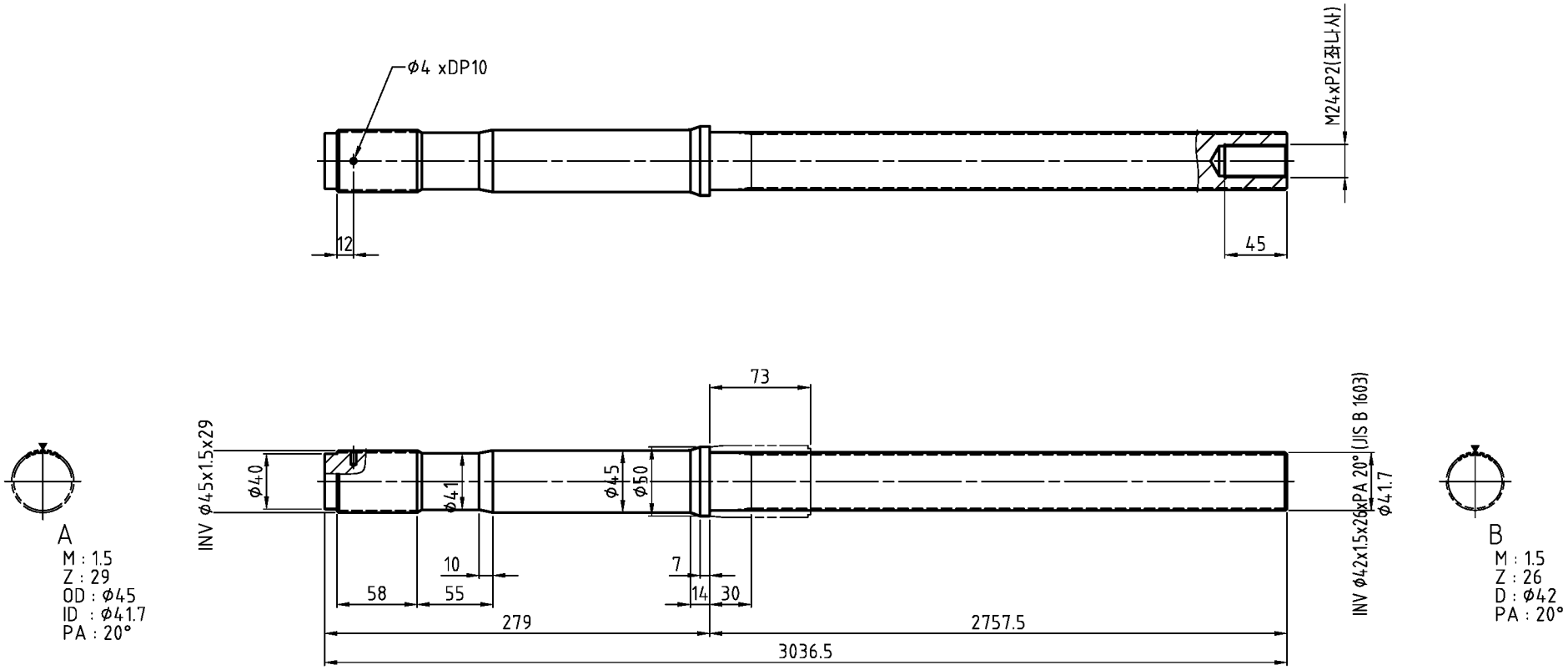

(株) S·M 플라텍 S.M PLATEK CO.,LTD.	TEK75MHS								
	SCREW COUPLING PART								